E-TRAC™ Drive Systems

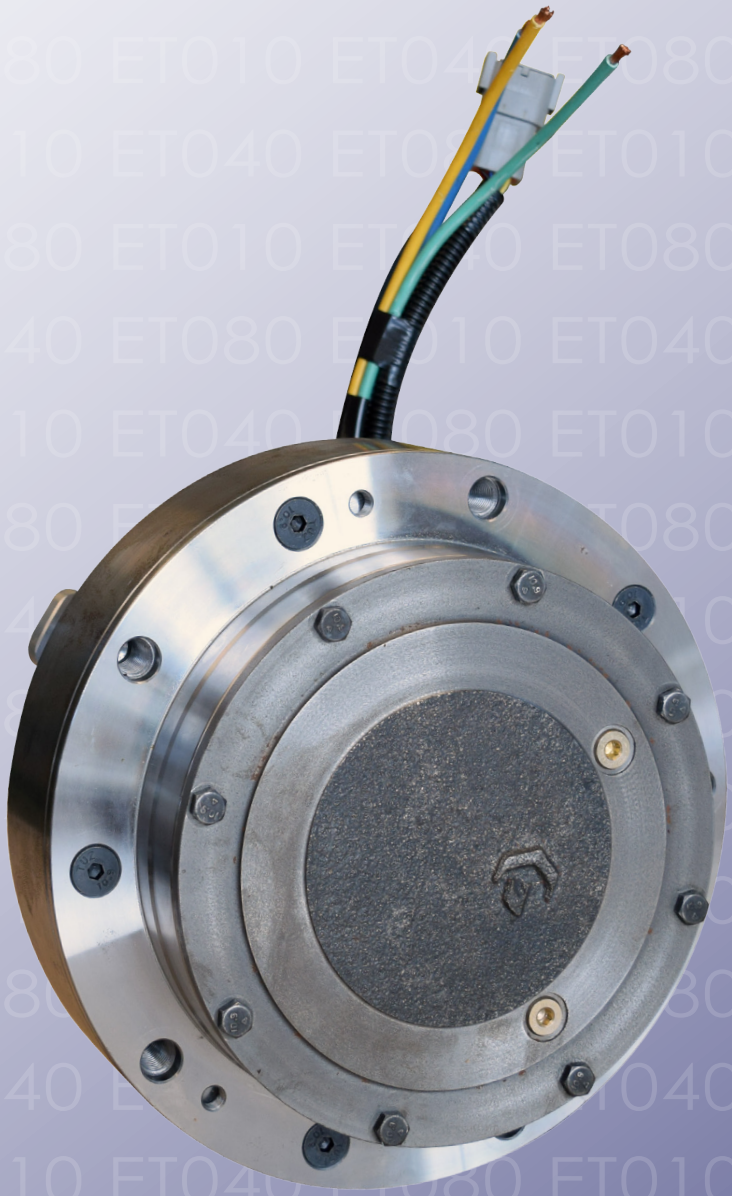

AuburnGear

400 E. Auburn Drive | Auburn, IN 46706 260.925.3200 www.AuburnGear.com

E-TRAC™ ET010 Drive System

GENERAL SPECIFICATIONS

Max. Intermittent Output Torque..... 10,000 lb-in
Max Input Speed..... 5000 RPM
Approximate Gearbox Weight..... 58 lbs
Approximate Oil Capacity..... 10 oz

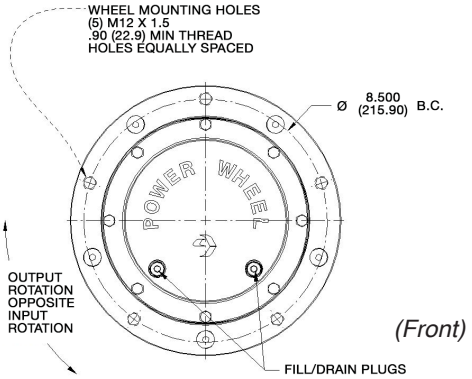

(Front)

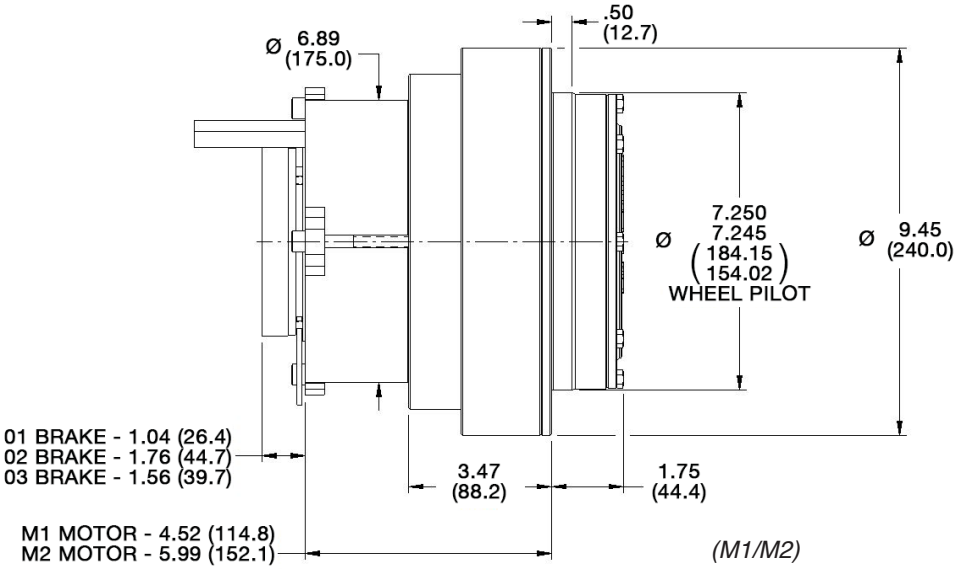

(M1/M2)

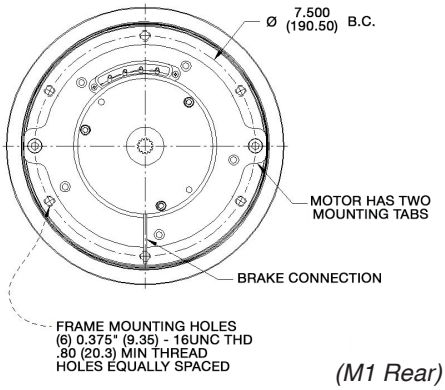

(M1 Rear)

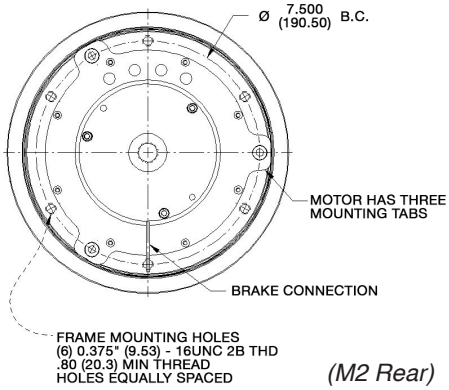

(M2 Rear)

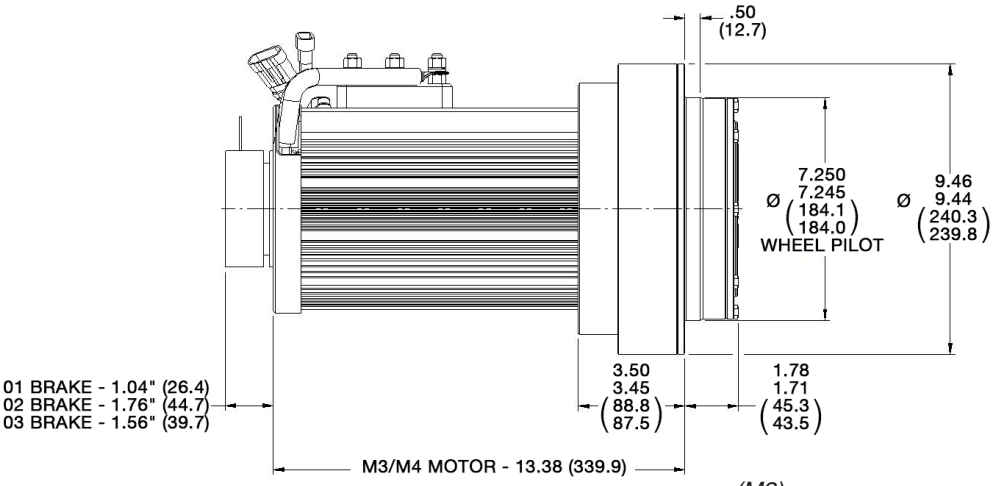

(M3)

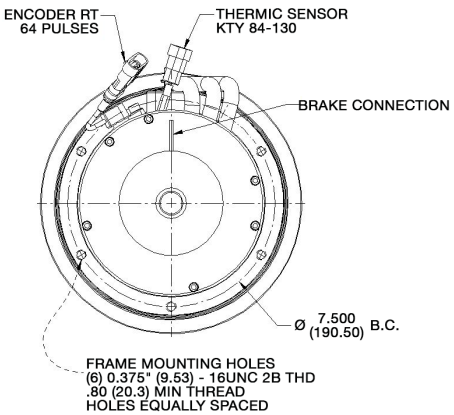

(M3 Rear)

MOTOR	VOLTAGE	TORQUE LB-IN (Nm)	SPEED
M1	24V PMAC	24.8 (2.8)*	2850
		99.1 (11.2)^	1200
M2	48V PMAC	83.2 (9.4)*	5000
		330.1 (37.3)^	1200
M3	24V AC	147.9 (16.7)*	2000
		531.0 (60)^	1000
M4	48V AC	147.9 (16.7)*	2000
		531.0 (60)^	1000

*CONTINUOUS RATING; INDICATES S2-60MIN THERMAL RATING
^ PEAK RATING; INDICATES S2-2MIN THERMAL RATING

RATIOS
049 = 49.08:1
030 = 30.891
025 = 25.09:1

CONTROLLER
01 = NONE
Open Controller

ET010 — M1 — H1 — S1 — 049 — B1 — 01

E-TRAC
Series 10

HUB MOUNT
H1-(5) M12x1.5 on a 8.500" (215.90 mm) BC

FRAME MOUNTING
S1-(6) 3/8-16UNC on a 7.500" (190.5mm) BC

BRAKE	VOLTAGE	STATIC HOLDING TORQUE LB-IN (Nm)
00	NONE	X
B1	24V	88 (10)
B2	24V with Manual Release	88 (10)
B3	24V	185 (21)

ET010 VARIATIONS

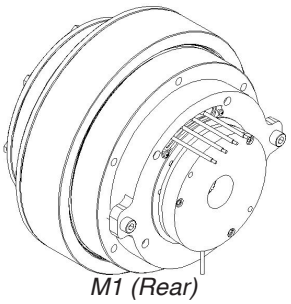

M1 (Rear)

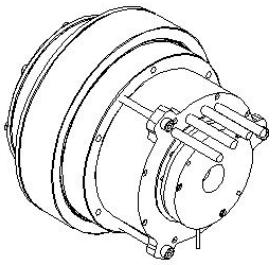

M2 (Rear)

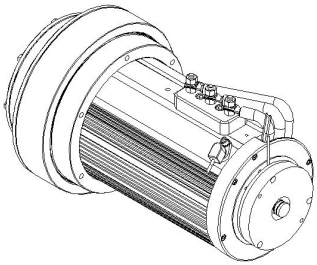

M3 (Rear)

ET010 APPLICATIONS AND TARGET MARKETS

AERIAL WORK PLATFORMS
- Scissor Lifts
- Stock Pickers

COMMERCIAL TURF EQUIPMENT
- Mowers
- Sprayers

GROUND SUPPORT EQUIPMENT
- Tugs
- Helicopter Dollies

LIGHT CONSTRUCTION
- Floor Scrapers
- Floor Scrubbers

INDUSTRIAL EQUIPMENT
- Automated Guided Vehicles

BEARING CURVE

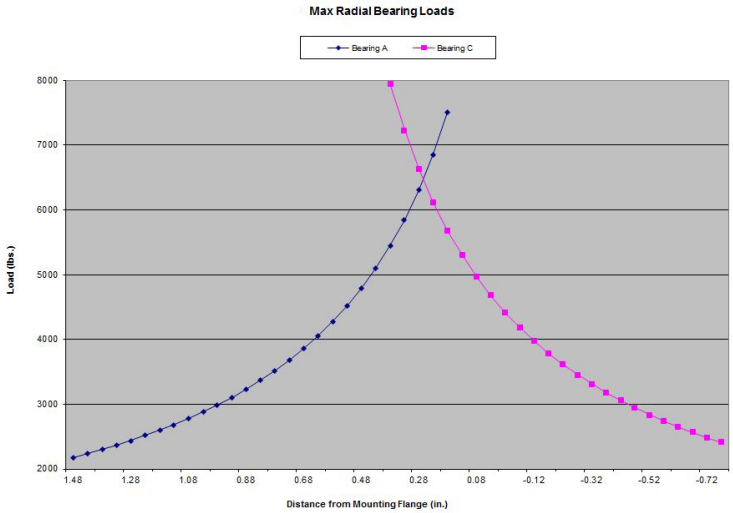

E-TRAC™ ET040 Drive System

GENERAL SPECIFICATIONS

Max. Intermittent Output Torque.....40,000 lb-in
Max Input Speed.....5000 RPM
Approximate Gearbox Weight.....85 lbs
Approximate Oil Capacity.....27 oz

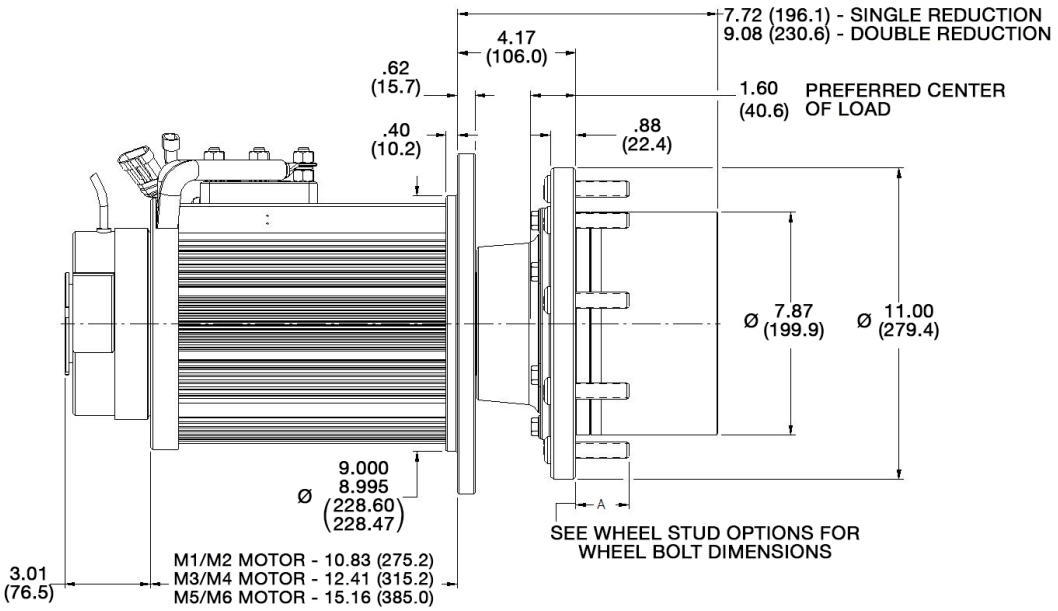

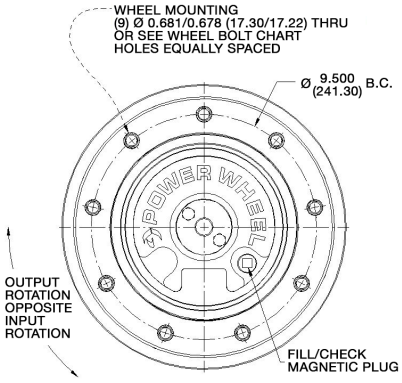

(Front)

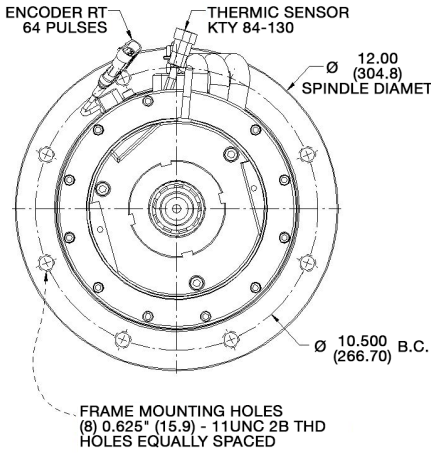

(Rear)

MOTOR	VOLTAGE	TORQUE LB-IN (Nm)	SPEED
M1	48V AC	253.1 (28.6)*	2000
		471.7^	1200
M2	80V AC	253.1 (28.6)*	2000
		471.7 ^	1000
M3	48V AC	338.1 (38.2)*	2000
		938.2^	1000
M4	80V AC	338.1 (38.2)*	2000
		938.2^	1000
M5	48V AC	422.6*	2000
		1419.6^	1000

*CONTINUOUS RATING; INDICATES S2-60MIN THERMAL RATING
^ PEAK RATING; INDICATES S2-2MIN THERMAL RATING

RATIOS

014=14.30:1	032=32.79:1
015=15.88:1	037=37.55:1
017=17.95:1	046=46.74:1
020=20.80:1	051=51.65:1
022=22.72:1	058=58.12:1
025=25.16:1	067=67.01:1
028=28.37:1	

BRAKE	VOLTAGE	STATIC HOLDING TORQUE LB-IN (Nm)
00	NONE	X
B1	24V	531 (60)

ET040 — M1 — H1 — S1 — 025 — 01 — B1 — 01

E-TRAC Series 40

HUB MOUNT
H1-(9) Wheel Studs on 9.50" (241.3) BC

FRAME MOUNTING
S1-(6) 5/8-16UNC on a 10.500" (266.70) BC
Pilot - 9.00/8.995 (228.60/228.47)

WHEEL STUDS
00=None, 0.681/0.678 (17.30/17.22)
01=1/2-20 UNF-2A x 1.62 (41.1)
02=5/8-18 UNF-2A x 1.48 (37.6)
03=9/16-18 UNF-2A x 1.87 (47.5)
04=M16 x 1.5-6g x 2.10 (53.5)
05=M18 x 1.5-6g x 1.91 (48.5)

CONTROLLER
01 = NONE
Open Controller

ET040 VARIATIONS

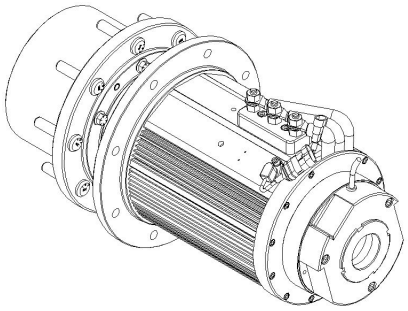

(Rear ISO)

ET040 APPLICATIONS AND TARGET MARKETS

GROUND SUPPORT EQUIPMENT
- Tugs
- Belt Loaders

LIGHT CONSTRUCTION
- Piggyback Forklifts

INDUSTRIAL EQUIPMENT
- Automated Guided Vehicles

SPECIALTY AGRICULTURE
- Augers and Traction Drives

BEARING CURVE

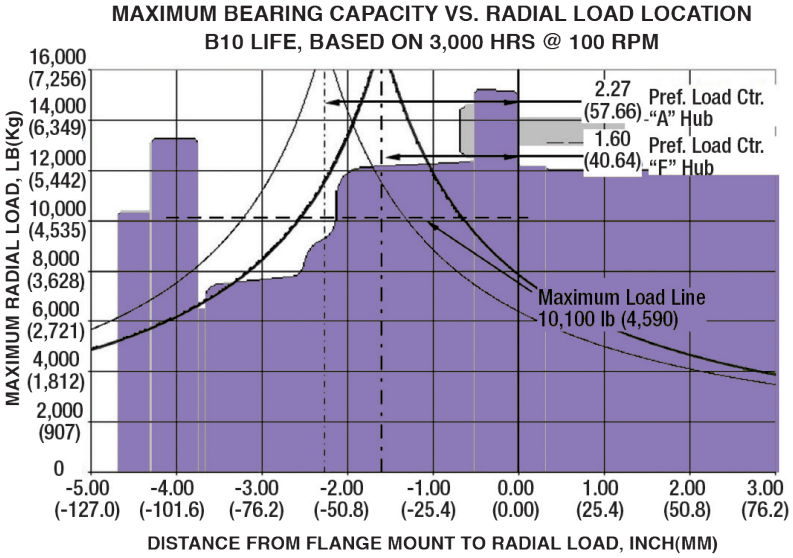

E-TRAC™ ET070 Drive System

GENERAL SPECIFICATIONS

Max. Intermittent Output Torque..... 70,000 lb-in
Max Input Speed..... 5000 RPM
Approximate Gearbox Weight..... 125 lbs
Approximate Oil Capacity..... 35 oz

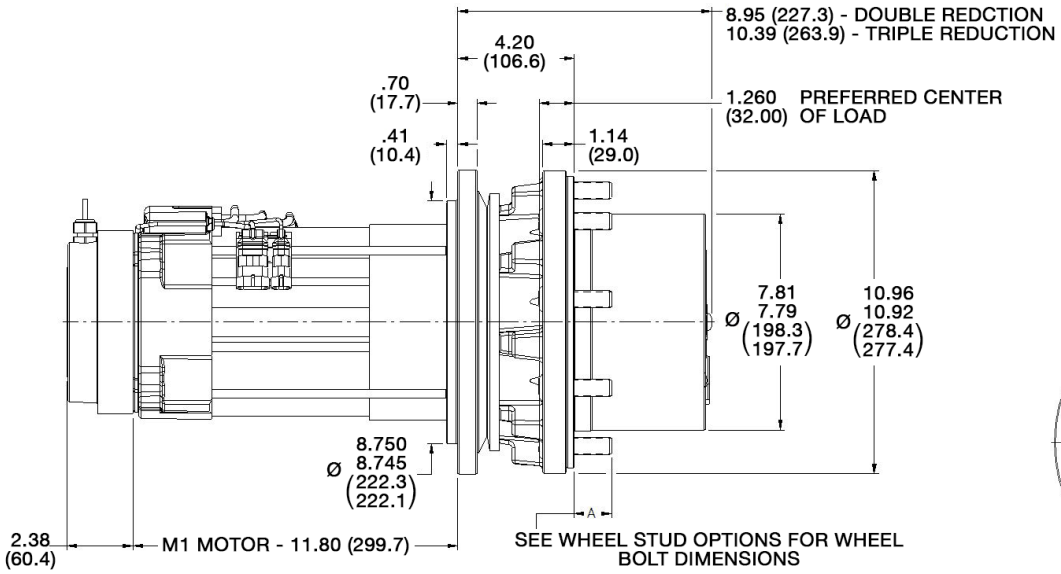

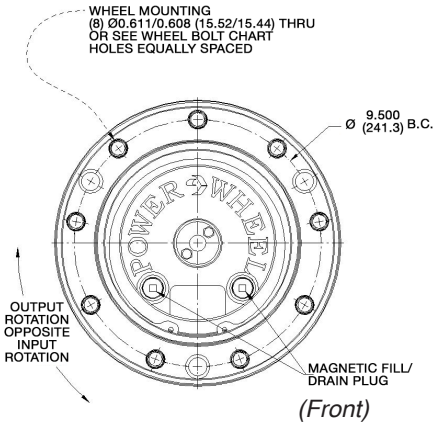

(Front)

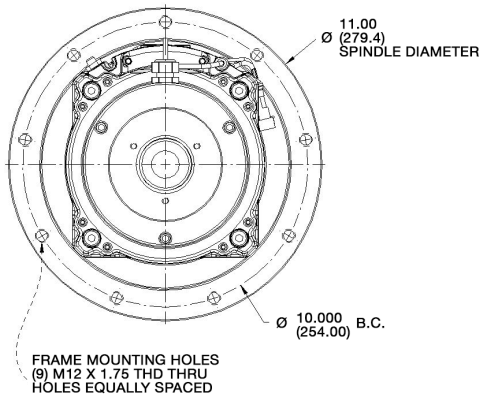

(Rear)

RATIOS		TRIPLE REDUCTIONS		
014=14.30:1		080=80.70:1		
017=17.94:1		081=87.89:1	136=136.72:1	253=253.91:1
022=22.71:1	037=37.52:1	097=97.04:1	150=150.90:1	276=276.35:1
025=25.15:1	046=46.74:1	100=100.00:1	169=169.47:1	304=304.90:1
028=28.27:1	058=50.09:1	109=109.03:1	195=195.12:1	342=342.28:1
032=32.79:1	066=66.98:1	125=125.59:1	220=220.57:1	393=393.35:1

MOTOR	VOLTAGE	TORQUE LB-IN (Nm)	SPEED
M1	24V AC	147.3 (16.6)*	2000
		168.2 (19.0)^	1200

*CONTINUOUS RATING; INDICATES S2-60MIN THERMAL RATING
^ PEAK RATING; INDICATES S2-2MIN THERMAL RATING

WHEEL STUDS
00=None, 0.681/0.678 (17.30/17.22)
01=1/2-20 UNF-2A x 1.50 (38.1)
02=5/8-18 UNF-2A x 1.38 (35.1)
03=9/16-18 UNF-2A x 1.70 (43.2)
04=M16 x 1.5-6g x 50
05=M18 x 1.5-6g x 45

ET070 — M1 — H1 — S1 — 025 — 01 — B1 — 01

E-TRAC Series 70

HUB MOUNT
H1-(9) Wheel Studs on 9.50 (241.2) B.C.

FRAME MOUNTING
S1-(9) M12 x 1.75 10.000" (254.0 mm)

CONTROLLER
01 = NONE Open Controller

BRAKE	VOLTAGE	STATIC HOLDING TORQUE LB-IN (Nm)
00	NONE	X
B1	24V	531 (60)

AuburnGear 400 E. Auburn Drive | Auburn, IN 46706 260.925.3200 www.AuburnGear.com

ET070 VARIATIONS

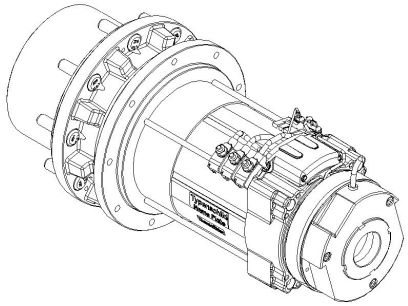

(Rear ISO)

ET070 APPLICATIONS AND TARGET MARKETS

AERIAL WORK PLATFORMS
- Boom Lifts

GROUND SUPPORT EQUIPMENT
- Tugs
- Push-backs

INDUSTRIAL EQUIPMENT
- Automated Guided Vehicles

SPECIALTY AGRICULTURE
- Harvesters

BEARING CURVE AND MOTOR CURVE

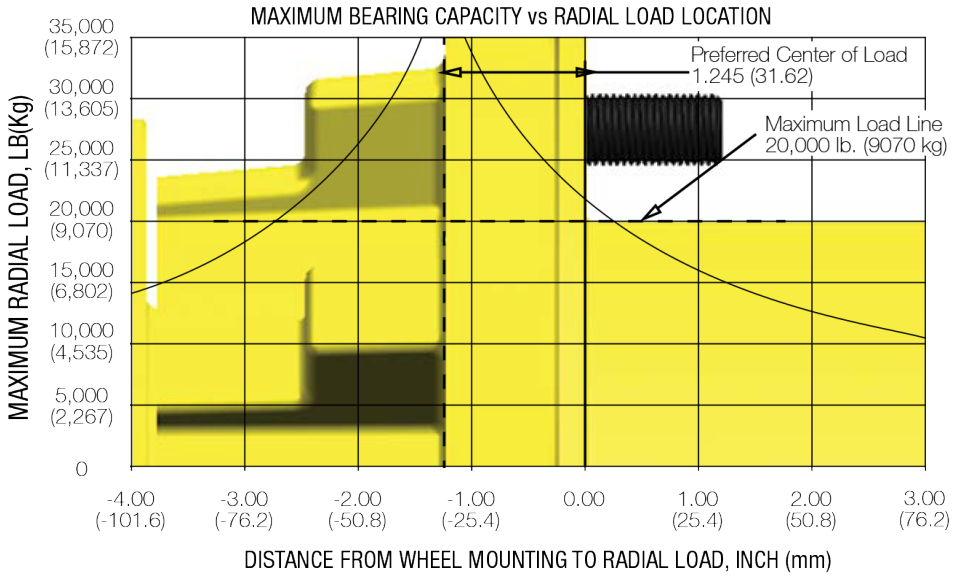

E-TRAC™ ET080 Drive System

GENERAL SPECIFICATIONS

Max. Intermittent Output Torque..... 100,000 lb-in
Max Input Speed..... 5000 RPM
Approximate Gearbox Weight..... 208 lbs
Approximate Oil Capacity..... 57 oz

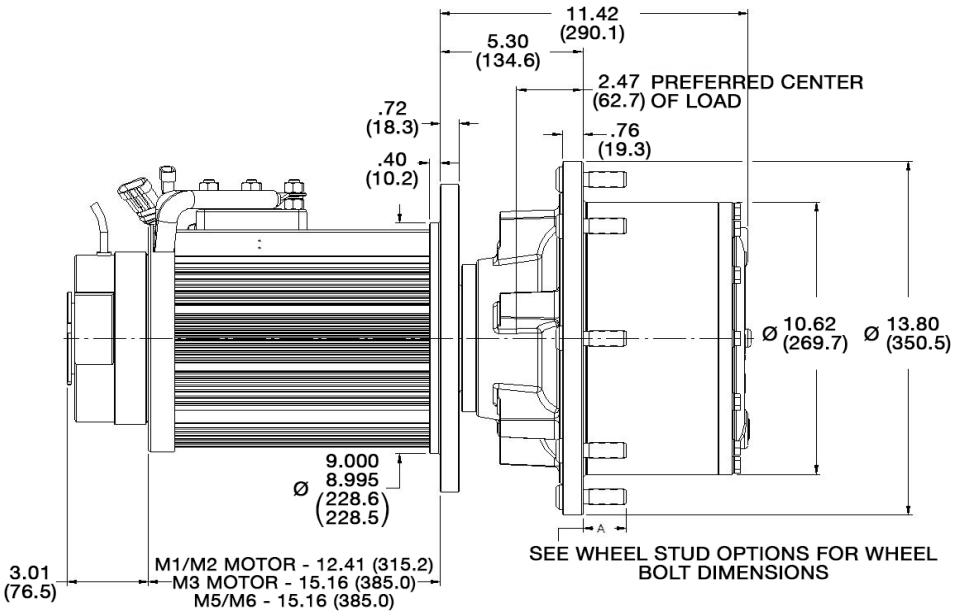

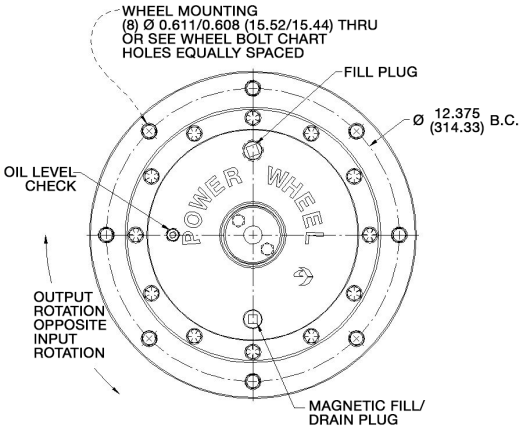

(Front)

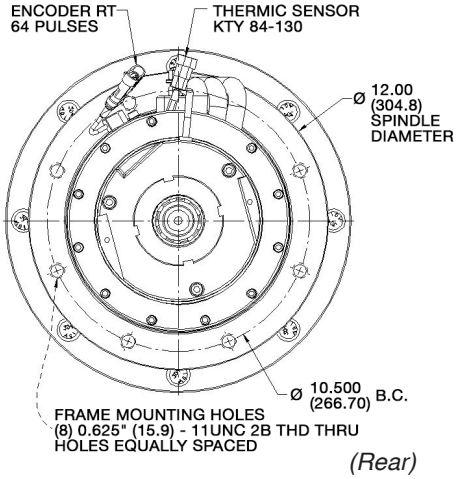

(Rear)

MOTOR	VOLTAGE	TORQUE LB-IN (Nm)	SPEED
M1	48V AC	338.1 (38.2)*	2000
		938.2 (106.0)^	1200
M2	80V AC	338.1 (38.2)*	2000
		938.2 (106.0)^	1000
M3	48V AC	422.6 (47.8)*	2000
		1419.6 (160.4)^	1000
M4	80V AC	507.1 (57.3)*	2000
		1957.8 (221.2)^	1000
M5	96V AC	507.1 (57.3)*	2000
		1957.8 (221.2)^	1000

*CONTINUOUS RATING; INDICATES S2-60MIN THERMAL RATING
^ PEAK RATING; INDICATES S2-2MIN THERMAL RATING

RATIOS
014=14.39:1
017=17.83:1
022=22.59:1
025=25.71:1
030=30.50:1
034=34.20:1
041=41.42:1
049=49.00:1

WHEEL STUDS
00=None, 0.611/0.608 (15.52/15.44)
01=1/2-20 UNF-2A x 1.74 (44.2)
02=5/8-18 UNF-2A x 1.99 (50.5)
03=9/16-18 UNF-2A x 1.6 (40.6)
04=M16 x 2.0-6g x 50

CONTROLLER
01 = NONE
Open Controller

ET080 — M1 — H1 — S1 — 025 — 01 — B1 — 01

E-TRAC
Series 80

HUB MOUNT
H1-(8) Wheel Studs on a
12.375" (314.33mm) BC

FRAME MOUNTING
S1-(8) 5/8 - 11UNC on a
10.500" (266.70 mm) BC

BRAKE	VOLTAGE	STATIC HOLDING TORQUE LB-IN (Nm)
00	NONE	X
01	24V	531 (60)

AuburnGear 400 E. Auburn Drive | Auburn, IN 46706 260.925.3200 www.AuburnGear.com

ET080 VARIATIONS

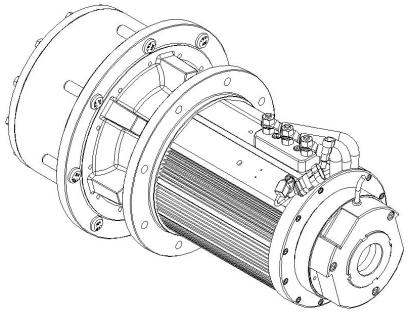

(Rear ISO)

ET080 APPLICATIONS AND TARGET MARKETS

CONSTRUCTION
- Puller/Tensioners

GROUND SUPPORT EQUIPMENT
- Tugs

COMMERCIAL EQUIPMENT
- People Movers

BEARING CURVE AND MOTOR CURVE

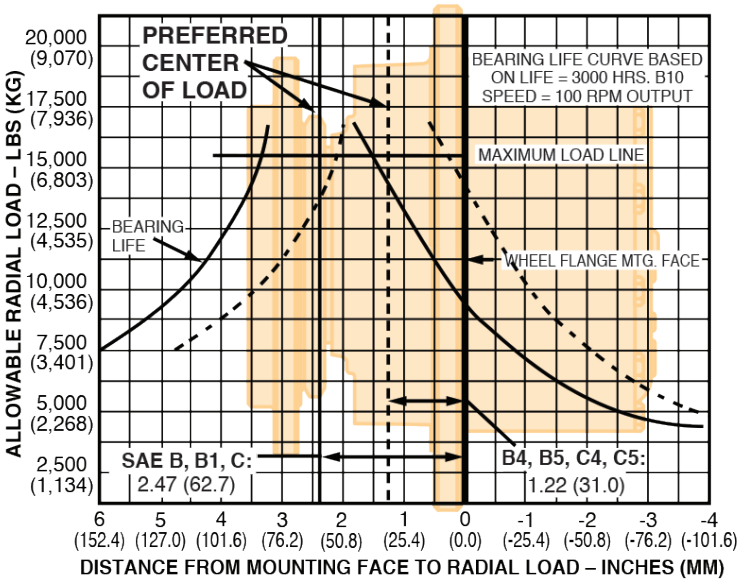

All specifications and data contained herein are nominal and subject to change without notice.
Specific applications should be referred to Auburn Gear for current information.

AuburnGear

400 E. Auburn Drive | Auburn, IN 46706 260.925.3200 www.AuburnGear.com